M C (B)

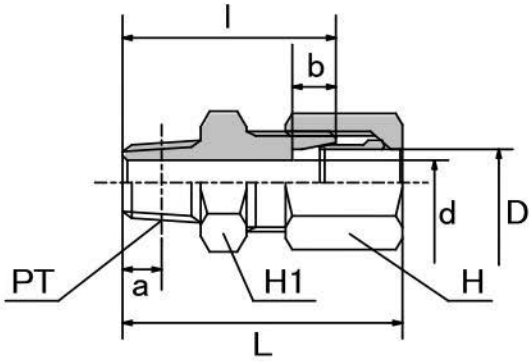

呼称	D	d	a	H1	H	b	l	L	PT
MC 4-1/8(B)	-	-	-	-	-	-	-	-	-
MC 6-1/8(B)	6	4	3.97	14	14	7	28	37	1/8
MC 6-1/4(B)	6	4	6.01	14	14	7	32	41	1/4
MC 6-3/8(B)	6	4	6.35	17	14	7	34	43	3/8
MC 8-1/8(B)	8	4	3.97	17	17	7	29	38	1/8
MC 8-1/4(B)	8	6	6.01	17	17	7	33	42	1/4
MC 8-3/8(B)	8	6	6.35	17	17	7	34	43	3/8
MC 8-1/2(B)	8	12	8.16	22	17	7	36	45	1/2
MC 10-1/8(B)	10	4	3.97	17	19	7	28	38	1/8
MC 10-1/4(B)	10	7	6.01	17	19	7	33	43	1/4
MC 10-3/8(B)	10	8	6.35	17	19	7	34	44	3/8
MC 10-1/2(B)	10	8	8.16	22	19	7	36	46	1/2
MC 12-1/4(B)	12	7	6.01	19	21	7	33	43	1/4
MC 12-3/8(B)	12	9	6.35	19	21	7	34	44	3/8
MC 12-1/2(B)	12	10	8.16	22	21	7	36	47	1/2
MC 15-1/4(B)	-	-	-	-	-	-	-	-	-
MC 15-3/8(B)	15	9	6.35	23	26	7.5	37	47	3/8
MC 15-1/2(B)	15	12	8.16	23	26	7.5	39	49	1/2
MC 16-3/8(B)	-	-	-	-	-	-	-	-	-
MC 16-1/2(B)	-	-	-	-	-	-	-	-	-
MC 18-1/2(B)	18	13	8.16	27	32	8	41	52	1/2
MC 20-1/2(B)	-	-	-	-	-	-	-	-	-
MC 20-3/4(B)	-	-	-	-	-	-	-	-	-